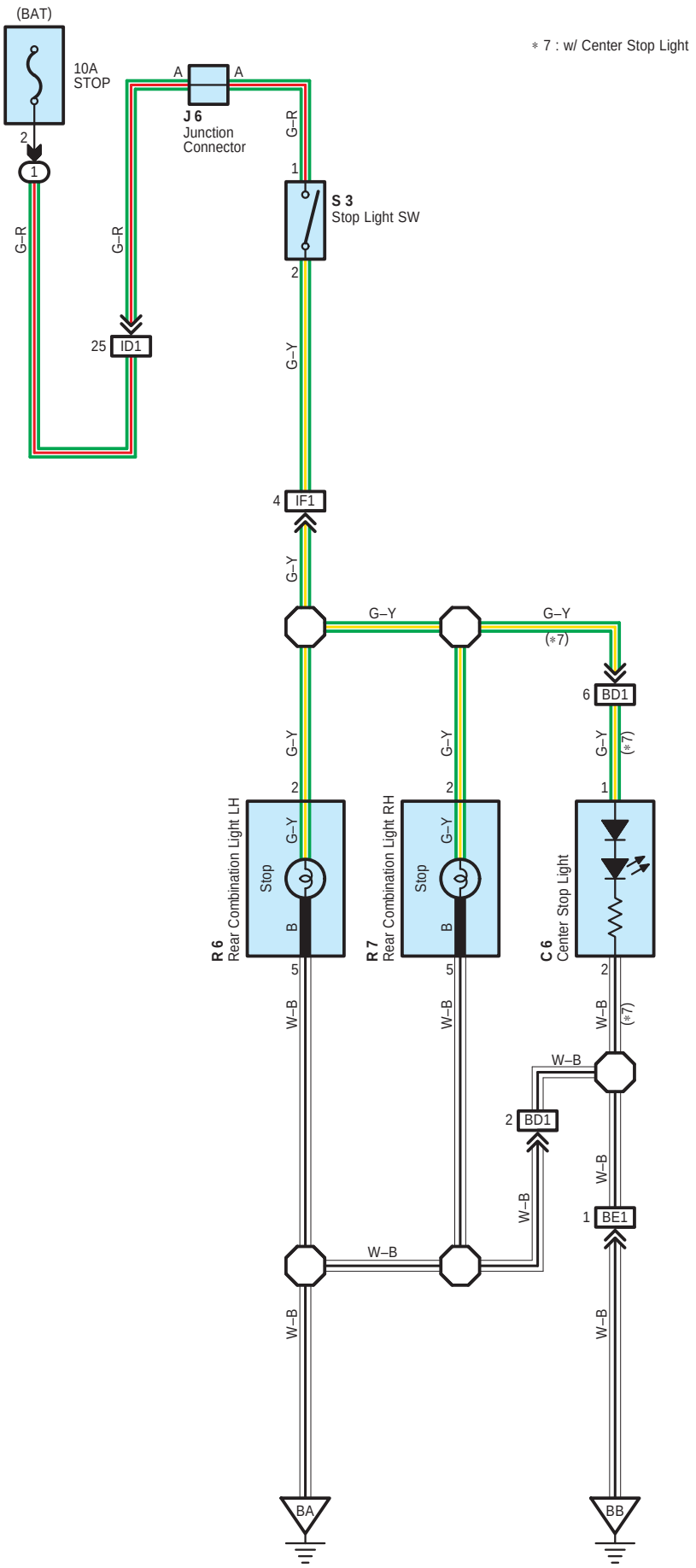
(BAT)
10A
STOP
2
1
G–R
G–R
25 ID1
A
A
J 6
Junction
Connector
G–R
1
S 3
Stop Light SW
2
G–Y
4 IF1
G–Y
G–Y
G–Y
(*7)
6 BD1
G–Y
(*7)
G–Y
G–Y
2
2
1
R 6
Rear Combination Light LH
Stop
G–Y
B
R 7
Rear Combination Light RH
Stop
G–Y
B
C 6
Center Stop Light
5
5
2
W–B
W–B
W–B
(*7)
W–B
2 BD1
W–B
W–B
1 BE1
W–B
W–B
W–B
BA
BB
* 7 : w/ Center Stop Light

○ : **Parts Location**

Code	See Page	Code	See Page	Code	See Page
C6	30 (LHD)	J6	39 (*6)	R7	41 (RHD)
	40 (RHD)	R6	31 (LHD)	S3	29 (LHD)
J6	29 (LHD)		41 (RHD)		37 (*5)
	37 (*5)	R7	31 (LHD)		39 (*6)

⬭ : **Relay Blocks**

Code	See Page	Relay Blocks (Relay Block Location)
1	22	Engine Room R/B (Engine Compartment Right)

▭ : **Connector Joining Wire Harness and Wire Harness**

Code	See Page	Joining Wire Harness and Wire Harness (Connector Location)
ID1	44 (LHD)	Engine Room Main Wire and Instrument Panel Wire (Right Kick Panel)
	48 (*5)	Engine Room Main Wire and Instrument Panel Wire (Cowl Side Panel RH)
	49 (*6)	
IF1	44 (LHD)	Instrument Panel Wire and Floor Wire (Left Kick Panel)
	48 (*5)	Instrument Panel Wire and Floor Wire (Right Kick Panel)
	49 (*6)	
BD1	45 (LHD)	Back Door No.2 Wire and Floor Wire (Rear Quarter Panel RH)
	50 (RHD)	
BE1	45 (LHD)	Back Door No.2 Wire and Back Door No.1 Wire (Right Side of Back Door)
	50 (RHD)	

▽ : **Ground Points**

Code	See Page	Ground Points Location
BA	45 (LHD)	Rear Quarter Panel RH
	50 (RHD)	
BB	45 (LHD)	Right Side of Back Door
	50 (RHD)	

* 1 : LHD 3SZ–VE * 2 : LHD K3–VE * 3 : RHD 3SZ–VE * 4 : RHD K3–VE * 5 : RHD w/ Heater * 6 : RHD w/o Heater